Lloyd's Register Marine

Working together for a safer world

Understanding ballast water management

Guidance for shipowners and operators

Cover image: A fisherman holding an invasive Chinese mitten crab, 'Eriocheir sinensis', which is a native species in North East Asia and now well-established in the River Thames, London. Photo courtesy of Paul Clark and taken by Phil Hurst, Natural History Museum, London.

Lloyd's Register Group Limited, its affiliates and subsidiaries and their respective officers, employees or agents are, individually and collectively, referred to in this clause as 'Lloyd's Register'. Lloyd's Register assumes no responsibility and shall not be liable to any person for any loss, damage or expense caused by reliance on the information or advice in this document or howsoever provided, unless that person has signed a contract with the relevant Lloyd's Register entity for the provision of this information or advice and in that case any responsibility or liability is exclusively on the terms and conditions set out in that contract.

Copyright © Lloyd's Register Group Limited. 2014.

Contents

1 Introduction 3

2 Regulation 4
2.1 The BWM Convention 4
2.2 The United States Coast Guard (USCG) regulations 5
2.3 European Union regulations 6
2.4 Other regulations 6
2.5 Ballast water treatment standards 6
2.6 Approval 7
2.7 Ballast Water Management Plans 8
2.8 Sampling and analysis 8
2.9 Port state control 8

3 How to comply 9
3.1 Planning for compliance 9
3.2 Achieving compliance in service 10
3.3 Alternative methods of compliance 10

4 Treatment processes 12
4.1 Overview 12

5 Selecting, installing and operating a ballast water treatment system 15
5.1 Available ballast water treatment systems 15
5.2 Selecting a treatment system 15
5.3 Installing ballast water treatment systems – general considerations 17

6 Active substances – hazards and safety precautions 20

7 Frequently asked questions 21

8 Useful references 23

9 Listing by supplier 24

10 Glossary of symbols, terms and abbreviations 25

11 Consultancy capability 26

1. Introduction

Shipping moves over 80% of the world's commodities and transfers approximately three to five billion tonnes of ballast water internationally every year. Ballast water is essential to the safe and efficient operation of shipping, but it also poses a serious ecological, economic and health threat through the transfer of invasive aquatic species inadvertently carried in it.

Ballast water contains a variety of organisms including bacteria and viruses and the adult and larval stages of the many marine and coastal plants and animals. While the vast majority of such organisms will not survive to the point when the ballast is discharged, some may survive and thrive in their new environment. These 'non-native species', if they become established, can have a serious ecological, economic and public health impact on the receiving environment.

The transfer of invasive marine species into new environments via ballast water has been identified as one of the major threats to the world's oceans. In response, the United Nations Conference on Environment and Development (UNCED) held in Rio de Janeiro in 1992, in its Agenda 21, called on the International Maritime Organization (IMO) and other international bodies to take action to address the problem.

By this time, the IMO had been seeking a solution for over 10 years. In 1991, it published Guidelines for Preventing the Introduction of Unwanted Organisms and Pathogens from Ship's Ballast Waters and Sediment Discharges. These were updated in 1993. In 1997, the IMO published Guidelines for Control and Management of Ships' Ballast Water to Minimize the Transfer of Harmful Aquatic Organisms and Pathogens (Resolution A.868(20)).

In February 2004, the IMO adopted the International Convention for the Control and Management of Ships' Ballast Water and Sediments (the Ballast Water Management or BWM Convention) to regulate discharges of ballast water and reduce the risk of introducing non-native species from ships' ballast water. To complement the BWM Convention, the IMO adopted over 15 sets of guidelines and other documents contained in its Marine Environmental Protection Committee (MEPC) resolutions and circulars.

The BWM Convention imposes a challenging ballast water discharge standard. In response to this, a number of technologies have been developed and commercialised by different vendors. Many have their origins in land-based applications for municipal and industrial water and effluent treatment, and have been adapted to meet the requirements of the BWM Convention and shipboard operation. These systems must be tested and approved in accordance with the relevant IMO Guidelines.

In addition to the IMO, other national bodies have introduced regulations in response to national concerns. The most influential of these is the United States Coast Guard (USCG) which has established both regulations and guidelines to prevent the introduction and spread of aquatic nuisance species. The USCG's final rule was published on 23 March 2012 in the Federal Register, and became effective on 21 June, 2012.

This publication gives an overview of the BWM Convention requirements and guidance on preparing for its implementation, including what you need to consider when selecting, procuring and installing a ballast water treatment system. There is also a frequently asked questions section together with a list of useful reference documents and websites which provide further information and guidance.

This publication also provides updated information on suppliers, and indicates the status of systems in relation to the approval process. An outline description of water treatment processes and an appraisal of commercially available and developing technologies for ballast water treatment are also provided, along with information relating to operation of the systems as the technologies become more widely used.

The continued assistance of the technology suppliers who contributed much of the information it contains is gratefully acknowledged.

2. Regulation

2.1 The BWM Convention

Applicability
The BWM Convention will apply to all ships including submersibles, floating craft, floating platforms, FSUs and FPSOs. It will not apply to:

- ships not designed to carry ballast water
- warships, naval auxiliary ships or other ships owned or operated by a state
- ships only on non-commercial service, or
- ships with permanent ballast water in sealed tanks.

Compliance schedule
The BWM Convention will enter into force 12 months after ratification by 30 States, representing 35 percent of the world's merchant shipping tonnage. For the current status of the BWM Convention please visit the IMO's website at www.imo.org/About/Conventions/StatusOfConventions

Once the BWM Convention has entered into force, all ships will be required to manage their ballast water on every voyage by either exchanging or treating it using an approved ballast water treatment system. The compliance schedule for when a ship can only use treatment is shown in Table 1.

<table>
<tr><th>Ballast capacity</th><th>Existing ships Constructed (keel laid) before 2009</th><th>Existing Ships Constructed (keel laid) in or after 2009 but before 2012</th><th>Existing Ships Constructed (keel laid) in or after 2012</th></tr>
<tr><td>Less than 1,500m^2</td><td>Entry into force (EIF)* before 1 January, 2017: compliance by first IOPP** renewal survey after the anniversary date of the delivery of the ship in 2016
EIF after 31 December, 2016: compliance by first IOPP renewal survey after EIF</td><td colspan="2">Compliance by first IOPP renewal survey after EIF</td></tr>
<tr><td>Between 1,500m^3 and 5,000m^3</td><td colspan="3">Compliance by first IOPP renewal survey after EIF</td></tr>
<tr><td>Greater than 5,000m^3</td><td colspan="2">EIF before 1 January, 2017: compliance by first IOPP** renewal survey after the anniversary date of the delivery of the ship in 2016
EIF after 31 December, 2016: compliance by first IOPP renewal survey after EIF</td><td>Compliance by first IOPP renewal survey after EIF</td></tr>
</table>

Table 1 – The compliance schedule for treatment

* Entry into force refers to entry into force of the BWM Convention. This will occur 12 months after ratification by 30 states, representing 35 percent of the world's merchant shipping tonnage

** The IOPP renewal survey refers to the renewal survey associated with the IOPP Certificate required under MARPOL Annex I

Once the BWM Convention has entered into force all ships of 400 gross tonnes (gt) and above will be required to have on board an approved Ballast Water Management Plan and a Ballast Water Record Book, and to be surveyed and issued with an International Ballast Water Management Certificate. For ships whose flag administration has not ratified the BWM Convention a certificate or statement of compliance can be issued.

Prototype technologies
Ships participating in a programme approved by the administration may use a prototype technology for up to five years before being required to install an approved treatment system in accordance with the compliance schedule in Table 1. A prototype system is a system under test and evaluation for meeting or exceeding the requirements of regulation D-2.

Surveys and certification
All ships over 400 gt are subject to surveys and certification. Ships below 400 gt will be subject to national survey and certification regimes.

The survey and certification scheme under the BWM Convention is similar to those under all other IMO Conventions.

On completion of an initial survey, an International Ballast Water Certificate will be issued for a ship whose flag has ratified the BWM Convention; for other ships, a Ballast Water Management Certificate of Compliance will be issued. Both the Certificates and the Statement will be valid for five years subject to annual, intermediate and renewal surveys.

The IMO has published Interim Survey Guidelines (contained in the Circular, BWM.2/Circ.7) and it is expected that these will be incorporated into the IMO's Harmonised System of Survey and Certification Guidelines (Resolution A.997(25)) once the BWM Convention enters into force.

Exemptions
An exemption may be granted to a ship or ships on a voyage or voyages between specified ports or locations, or to a ship which operates exclusively between specified ports or locations. An example of a ship that would qualify for this exemption would be a ferry trading solely between one or more ports.

Any exemption granted is valid for a maximum of five years subject to an intermediate review and provided the ship does not mix ballast water or sediments other than between the ports or locations specified in the exemption. However it should be noted that the exemptions can be withdrawn at any time by the issuing administrations.

To be eligible for an exemption a risk assessment must be carried out in accordance with IMO Resolution MEPC.162(56) – Guidelines for Risk Assessment under Regulation A-4 of the BWM Convention.

For further details on exemptions, you should contact the flag administration.

2.2 The United States Coast Guard (USCG) regulations

Applicability
All ships calling at US or Canadian ports and planning to discharge ballast water must carry out ballast water exchange or treatment in addition to sediment management. However, ballast water exchange will only be allowed until the implementation dates for treatment systems shown in Table 2.

Compliance schedule
Table 2 indicates the compliance dates by which ships discharging ballast water in US or Canadian waters are required to have a treatment system installed.

	Ballast water capacity	Date constructed	Compliance date
New vessels	All	On or after 1 December, 2013	On delivery
Existing vessels	Less than 1,500m^3	Before 1 December, 2013	First scheduled drydocking after 1 January, 2016
	1,500 – 5,000m3	Before 1 December, 2013	First scheduled drydocking after 1 January, 2014
	Greater than 5,000m^3	Before 1 December, 2013	First scheduled drydocking after 1 January, 2016

Table 2 – The USCG compliance schedule

Exemptions
The following vessels are exempt from ballast water management requirements, reporting requirements, and record-keeping requirements:
– crude oil tankers engaged in coastwise trade; and
– vessels which operate exclusively within one 'Captain of the Port' (COTP) zone.

The following vessels are exempt only from ballast water management requirements:
– seagoing vessels that operate in more than one COTP Zone, do not operate outside of the Exclusive Economic Zone (EEZ), and are less than or equal to 1,600 gross register tons or less than or equal to 3,000 gross tons (International Convention on Tonnage Measurement of Ships, 1969).
– non-seagoing vessels
– vessels that take on and discharge ballast water exclusively in one COTP zone.

Extensions
If the options given by the USCG are not practicably available despite all efforts, vessel owners can request an extension from the USCG to the implementation schedule. The availability of an Alternate Management System (AMS) (see section 2.5) does not prohibit a vessel owner from receiving an extension. The USCG regulations provide the process for requesting these extensions and when it can be documented. Extension requests must be submitted to the Coast Guard no later than 12 months before the scheduled implementation date.

2.3 European Union regulations

The European Commission has published a proposal for a regulation on the prevention and management of the introduction and spread of invasive alien species. The proposal's aim is to address the problem of invasive alien species to protect native biodiversity and ecosystem services; and to minimise and mitigate the impacts on human health and economy.

The proposal is for three types of interventions: prevention; early warning and rapid response; and management. In summary, the proposal states that a large proportion of invasive alien species are introduced unintentionally into the Union; therefore it is crucial to manage these pathways. Action in this area needs to be gradual and should include voluntary measures, such as the actions proposed by the BWM Convention, and mandatory measures which should build on the experience gained in the Union and in member states in managing certain pathways, including measures established through the BWM Convention.

The full details of the Regulation of the European Parliament and of the Council on the prevention and management of the introduction and spread of invasive alien species can be found at http://ec.europa.eu/environment/nature/invasivealien/docs/proposal/en.pdf

2.4 Other regulations

Other national requirements can be found in our National Ballast Water Management Requirements guidance document. To download a copy, visit www.lr.org/bwm

2.5 Ballast water treatment standards

Regulation D-2 of the BWM Convention sets the standard that ballast water treatment systems must meet (Table 3). Ballast water treatment systems must have a type approval certificate in compliance with the IMO Guidelines for the Approval of Ballast Water Management Systems (Resolution MEPC. 174(58)), which updated Resolution MEPC.125(53)).

It should be noted that the USCG treatment discharge standard is the same as the IMO BWM Convention D-2 Standard.

Organism category	Regulation
Plankton, >50 µm in minimum dimensions	<10 cells/m3
Plankton, 10-50 µm	<10 cells/ml
Toxicogenic Vibrio cholera (O1 and O139)	<1 colony forming unit (cfu)/100ml or less than 1cfu/g (wet weight)
Escherichia coli	<250 cfu/100ml
Intestinal Enterococci	<100cfu/100ml

Table 3 – The IMO D-2 standard for discharged ballast water

2.6 Approval

The BWM Convention
Technologies developed for ballast water treatment are subject to approval through specific IMO processes and testing guidelines. These are designed to ensure that such technologies meet the relevant IMO standards, are sufficiently robust, have minimal adverse environmental impact and are suitable for use in the specific shipboard environment.

Ballast water treatment systems are required to be tested against the following IMO guidelines:

All systems:

– Guidelines for Approval of Ballast Water Management Systems (referred to as the 'G8 Guidelines'). IMO resolution MEPC.174(58) which revokes MEPC.125(53).

In addition, for systems employing active substances:

– Procedure for Approval of Ballast Water Management Systems that make use of Active Substances (referred to as the 'G9 Guidelines'). IMO resolution MEPC.169(57) which revokes MEPC.126(53).

Approval consists of both shore-based testing of a production model, to confirm that the D-2 discharge standards are met; and shipboard testing, to confirm that the system works in service.

USCG regulations
The USCG requires that ballast water must be treated with a USCG type approved ballast water treatment system, in accordance with the schedule in Table 2. Recognising that there are currently no USCG type approved systems, the USCG has provided guidance on how to apply for an extension which would allow ships to operate in US waters without treating ballast water for up to five years after the compliance date in Table 2.

In addition, to avoid penalising ships that have already fitted a treatment system approved by another flag administration, the USCG has introduced the Alternate Management System (AMS). Some important facts about AMS are given below:

– AMS are ballast water treatment systems which have been accepted for use in US or Canadian waters by the USCG
– AMS is a temporary solution until the USCG type approved systems are available
– AMS approval does not necessarily mean that the system will achieve the USCG type approval
– A ship with an AMS installed can only use this system for a period of five years beyond the date when the ship would otherwise be required to comply with the USCG discharge standard
– The list of AMS approved systems can be found through US Department of Homeland Security's website at http://homeport.uscg.mil/ballastwater

2.7 Ballast Water Management Plans

All ships of 400 gt and above will be required to have on board an approved Ballast Water Management Plan and a Ballast Water Record Book to comply with the BWM Convention. The Ballast Water Management Plan is required to:

- assist the ship in complying with international regulations to minimise the risk of the transfer of harmful aquatic organisms and pathogens in ships' ballast water and associated sediments
- identify the ship's Ballast Water Management Officer
- consider ship safety elements, provide information to PSC officers on the ship's ballast handling system and confirm that ballast water management can be effectively planned
- include training on BWM operational practices
- be written in the working language of the ship. If this language is not English, French or Spanish a translation into one of these languages must be included.

2.8 Sampling and analysis

The BWM Convention
The IMO's guidance on ballast water sampling and analysis is given in the G2 Guidelines. The purpose of this guidance is to provide general recommendations on methodologies and approaches to sampling and analysis to test for compliance with the standards described in regulations D-1 and D-2 of the BWM Convention.

Sampling and analysis for compliance testing is a complex issue. According to the guidelines, testing for compliance can be performed in two steps. An indicative analysis of ballast water discharge may be undertaken as a first step to establish whether a ship is potentially in compliance with the BWM Convention prior to a detailed analysis.

When testing for compliance, the sampling protocol used should result in a representative sample of the whole discharge of the ballast water from any single tank or any combination of tanks being discharged.

USCG regulations
The USCG assesses compliance as part of its regular vessel inspections. This compliance approach follows a similar regime in place for all other equipment inspections. In general, a Coast Guard inspector would review documentation including the type approval certificate and AMS acceptance letter; and verify the crew's knowledge regarding use of equipment and its condition. If the results of this inspection are not satisfactory, the USCG would take samples of the ballast water discharge to test that the system is working effectively. It should be noted that the USCG continues to develop more rapid and accurate methods for sampling and analysis.

In addition, the USCG and the Environment Protection Agency (EPA) signed a Memorandum of Understanding in 2011 regarding the EPA's Vessel General Permit (VGP) program which becomes effective in December 2013. The Memorandum allows USCG and EPA to combine compliance efforts and share information. The VGP requires ship operators to self-monitor ballast water treatment systems. This includes functional tests, and analysis of ballast water samples to confirm biological performance and that concentrations of residual chemicals are within limits.

For more information on the USCG's generic protocol for the verification of ballast water treatment technology, go to http://www.uscg.mil/hq/cg5/cg522/cg5224/docs/600r10146.pdf

2.9 Port state control

The BWM Convention
Once the BWM Convention enters into force, ships may be subject to inspections by port states to determine whether they comply with the BWM Convention's requirements. These inspections are limited to:

- verifying certification
- inspecting the ballast water record book
- sampling ballast water in accordance with the IMO's guidelines.

USCG regulations
A report is required to be submitted to the USCG COTP 24 hours before arriving at a US or Canadian port. The ship must provide the COTP with access to the vessel in order to take samples of ballast water and sediment; examine documents; and make other enquiries to assess compliance with USCG requirements.

3. How to comply

Follow the steps in this chapter to help you plan for compliance and achieve compliance in service.

3.1 Planning for compliance

1. Understand your obligations under the BWM Convention and other national and local regulations
Under the BWM Convention, you will need to:

- ensure all ballast discharges comply with regulation D-1 or D-2, i.e., that ballast is exchanged or treated: this obligation applies to ballast discharges both at sea and in port
- ensure the procedures in the Ballast Water Management Plan are followed at all times
- keep proper records in the Ballast Water Record Book
- operate and maintain ballast water treatment systems in accordance with the manufacturer's instructions.

2. Review current shipboard ballast tank, pumping and piping arrangements
Review the ballast water tanks and pumping and piping arrangements on board to identify any changes required to achieve compliance with the BWM Convention. Pay particular attention to:

a. multi-use tanks, for example, those used for ballast and as storage (temporary or otherwise) of grey and/or black water: different water types should not be mixed and should only be discharged in accordance with the appropriate regulations. When changing from one use to another tanks should be flushed and/or cleaned to remove the previous contents. You should ensure this is achievable.

b. eductors being used for stripping ballast tanks: it is common practice to use local sea water for the eductor drive water; consideration should be given to using only internal ballast as the eductor drive water and arrangements should be made to achieve this.

3. Develop a Ballast Water Management Plan
Start developing your Ballast Water Management Plan at an early stage. It can then be reviewed as your preparations for compliance proceed and amended with information such as the treatment system selected for installation, any safety issues and mitigation measures, crew training requirements and the name of the designated Ballast Water Management Officer.

4. Select and install a ballast water treatment system
Selecting and installing a treatment system needs careful consideration and planning. You will need to ensure the required resources are available when needed, that plans are submitted to class for approval in good time and that the system and any ancillary equipment are delivered to the ship on schedule. For further information, see Section 5.

5. Develop training for ships' staff and ensure they are adequately trained in BWM operations
A suitable staff training scheme will need to be developed and included in the Ballast Water Management Plan. Staff will need to be trained in their obligations under the BWM Convention, the ballast operations on board the ship, the operation and maintenance of the ballast water treatment system, and any safety risks and mitigation measures associated with the ballasting operations or treatment system.

6. Develop a final Ballast Water Management Plan and submit for approval
Develop a final version of the Ballast Water Management Plan, get any required internal approvals and submit the Plan for approval to class or flag as appropriate. It should be submitted in good time to avoid delays.

7. Survey and certification
When all your preparations for compliance are complete, arrange for an initial survey of the ship for issue of an International Ballast Water Management Certificate or Certificate of Compliance.

8. Understand your obligations under the USCG regulations
If your ship is calling at US or Canadian ports and planning to discharge ballast water, ballast water exchange or treatment must be carried out in addition to sediment management. However ballast water exchange will only be allowed until the implementation deadlines for treatment systems, mentioned in the previous section.

One other method which the USCG accepts for ballast water management is to use potable water (from the North American municipal system). However, the ballast tanks must be cleaned of any sediments before this application.

The USCG also requires: a Ballast Water Management Plan (this does not need to be approved); clean ballast tanks free from sediments; and a report which is to be submitted to the US Authorities 24 hours before arriving at a US or Canadian port.

3.2 Achieving compliance in service

1. Manage ballast water and sediments in accordance with the Ballast Water Management Plan
Ensure that all discharges of ballast and sediments are managed in accordance with the requirements of the BWM Convention and in accordance with the procedures in the approved Ballast Water Management Plan. Make sure that records of ballasting operations and sediment management are properly recorded in the Ballast Water Record Book.

2. Keep the Ballast Water Management Plan and Ballast Water Record Book up to date
Carry out periodic reviews of the Ballast Water Management Plan and update it as necessary. Arrange for amendments to be approved if required.

3. Ensure required surveys are carried out within the permitted range dates
Arrange for the required annual, intermediate and renewal surveys in good time and ensure they are carried out within the permitted range dates.

4. Operate and maintain equipment in accordance with the manufacturer's instructions
The ballast water treatment system should be operated and properly maintained in strict accordance with the manufacturer's instructions. The procedures in the approved Ballast Water Management Plan will reflect this requirement.

5. Monitor the treatment system's performance
The system's performance should be monitored using the installed monitoring equipment, meters or sensors. The parameters you monitor will vary according to the type of system you install. They include: flow rate/back flush frequency; active substance dosage rate; neutraliser dosage rate; power consumption; TRO (Total Residual Oxidant); and pH (acidity/alkalinity).

Having the system serviced and checked by the manufacturer on a regular basis and having biological efficacy checks carried out periodically will also help ensure the system continues to function as designed and certified.

6. Manage ballast water and sediments in accordance with USCG requirements if they apply to you
Ensure that all discharges of ballast and sediments are managed in accordance with the requirements of the USCG and in accordance with the procedures in the approved Ballast Water Management Plan. Make sure that records of ballasting operations and sediment management are properly recorded in the Ballast Water Record Book.

3.3 Alternative methods of compliance

Although most deep water ships are expected to comply by installing a fixed ballast water treatment system on board, a number of ships will choose to comply by using one or more of the alternative methods shown in Figure 1.

The BWM Convention considers the role of alternative methods of compliance as follows:
"Alternatives" – BWMC Regulation B3-6: "The requirements of this regulation (i.e. D-1 or D-2 compliance) do not apply to ships that discharge ballast water to a reception facility designed taking into account the guidelines developed by the organization for such facilities."

"Other methods" – BWMC Regulation B3-7: "Other methods of ballast water management may also be accepted as alternatives to the ballast water exchange standard and ballast water performance standard, provided that such methods ensure at least the same level of protection to the environment, human health, property of resources, and are approved in principle by IMO's Marine Environment Protection Committee."

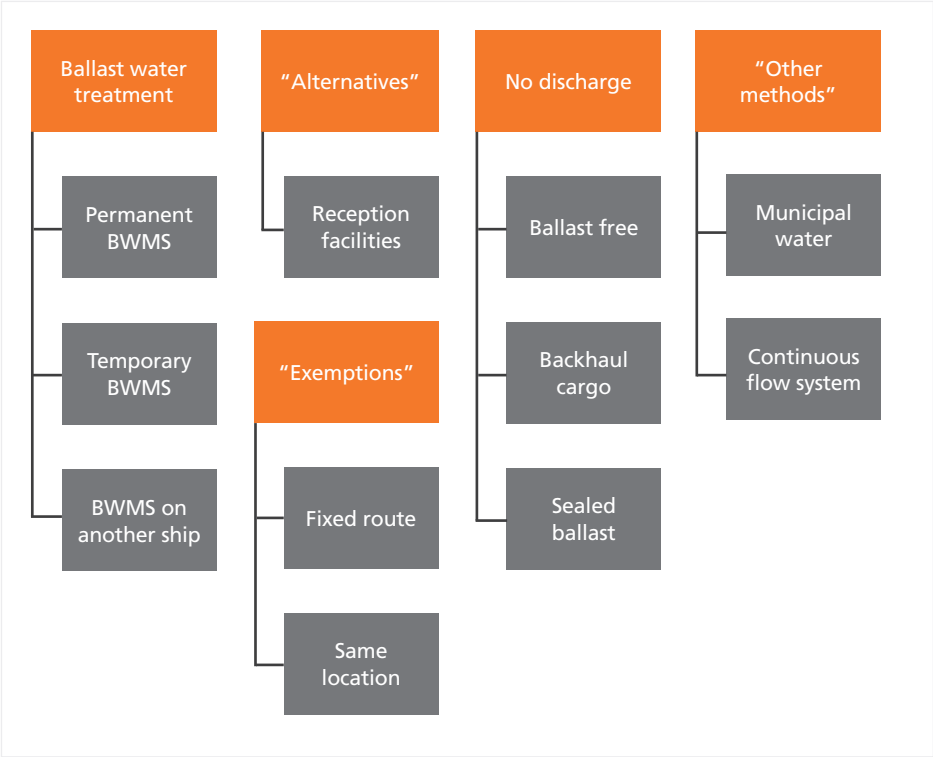

Figure 1 – Alternative methods of compliance

It should be noted that the USCG only accepts municipal water from North American supplies. However, this is not currently accepted under the BWM Convention, although it is under discussion.

4. Treatment processes

4.1 Overview

The technologies used for treating ballast water are generally derived from municipal and other industrial applications. However, their use is constrained by key factors such as space, cost and efficacy (with respect to the IMO discharged ballast water standards).

There are two generic types of process technology used in ballast water treatment:
– solid-liquid separation, and
– disinfection.

Solid-liquid separation is simply the separation of suspended solid material, including the larger suspended micro-organisms, from the ballast water, either by sedimentation (allowing the solids to settle out by virtue of their own weight) or by surface filtration (removal by straining; i.e. by virtue of the pores in the filtering material being smaller than the size of the particle or organism). All solid-liquid separation processes produce a waste stream containing the suspended solids. This waste stream comprises the backwash water from filtering operations or the underflow from hydrocyclone separation. These waste streams require appropriate management and during ballasting they can be safely discharged at the point where they were taken up. On deballasting, the solid-liquid separation operation is generally bypassed.

Disinfection removes and/or inactivates micro-organisms using one or more of the following methods:
– chemical inactivation of the micro-organisms through either:
  - oxidising biocides – general disinfectants which act by destroying organic structures, such as cell membranes or nucleic acids; or
  - non-oxidising biocides – these interfere with reproductive, neural, or metabolic functions of the organisms.
– physicochemical inactivation of the micro-organisms through processes such as UV light, heat or cavitation
– asphyxiation of the micro-organisms through deoxygenation.

All of these disinfection methods have been applied to ballast water treatment, with different products employing different unit processes (see Table 4). Most commercial systems comprise two or more stages of treatment with a solid-liquid separation stage being followed by disinfection (Figure 2).

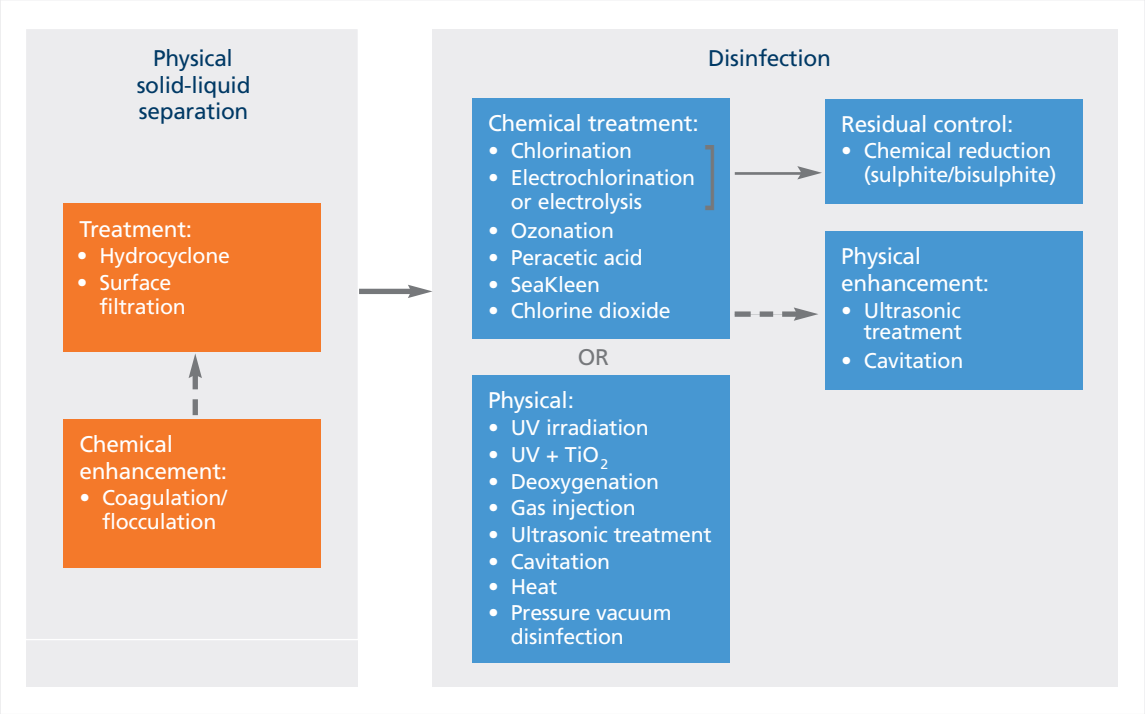

Figure 2 – Generic ballast water treatment technology process options

While disinfection by-products are an issue, and central to the approval of ballast water management systems that make use of active substances, suppliers are confident that the levels generated are unlikely to be problematic. There is a large amount of scientific and technical information on the formation of disinfection by-products that is likely to support this. Where chemicals are used as part of the treatment process, they are typically provided as concentrated solids or liquids, so that they may be easily stored on board a ship.

Ballast water treatment system processes

The range of system processes employed for ballast water treatment is shown in Table 4 with examples of filtration and UV systems shown in Figures 3 and 4 respectively. As tends to be the case, systems which employ active substances will treat on uptake only (with the exception of neutralisation prior to discharge) whereas other mechanical methods tend to treat on both uptake and discharge. A typical treatment process is shown in Figure 5.

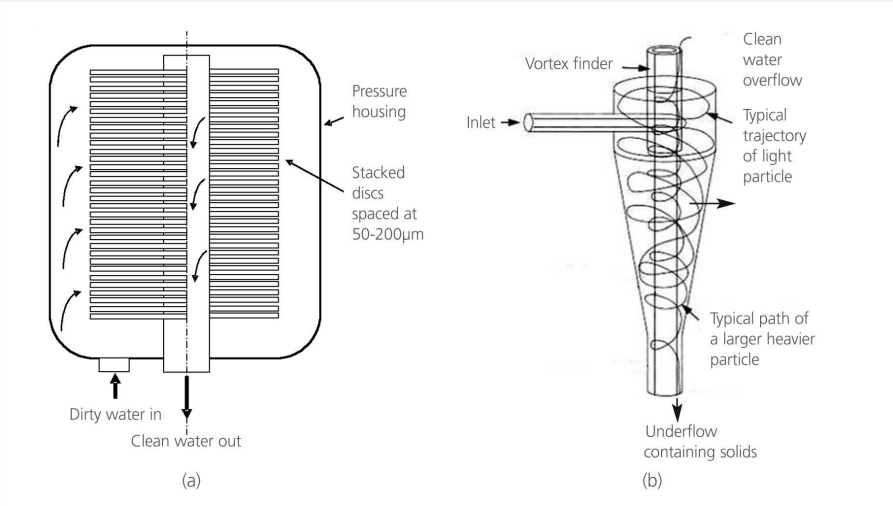

Figure 3 – Filtration (a) and hydrocyclone (b) processes

Commercial systems differ mainly in the choice of disinfection technology and the overall system configuration (i.e., the coupling of the disinfection part with solid-liquid separation, where the latter is used). Almost all have their basis in land-based systems employed for municipal and industrial water and wastewater and thus can be expected to be effective for the treatment of ballast water, albeit subject to constraints in the precise design arising from space and cost limitations.

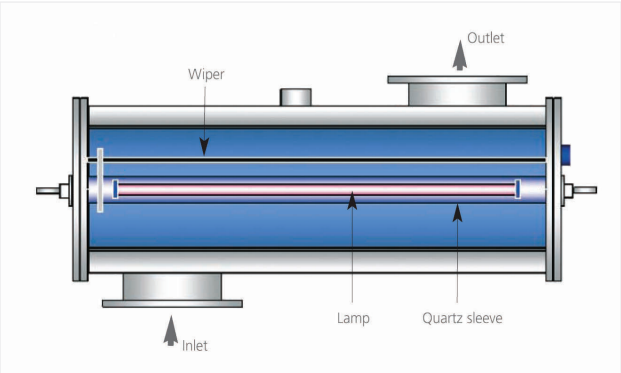

Figure 4 – UV tube and system

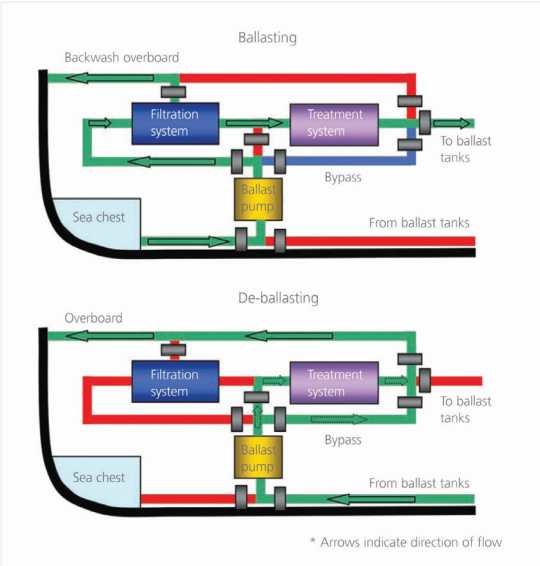

Figure 5 – Typical treatment process

Process	Method	Benefit	Considerations	Comments
Solid-liquid separation				
Filtration	Generally using discs or fixed screens with automatic backwashing	Effective for larger particles and organisms	Maintaining flow with minimum pressure drop requires backwashing. Low membrane permeability means surface filtration of smaller micro-organisms is not practical.	Mesh sizes are proportional to size of organism filtered (e.g., larger organisms such as plankton require mesh between 10 and 50 µm)
Hydrocyclone	High velocity centrifugal rotation of water to separate particles	Alternative to filtration and can be more effective	Effective only for larger particles	Effectiveness depends on density of particle and surrounding water, particle size, speed of rotation and time
Coagulation	Optional pre-treatment before separation to aggregate particles to increase their size	Increasing size of particles increases efficiency of filtration or hydrocyclone separation	May require additional tank space to store water which has been treated due to long residence time for process to be effective	Ballasted flocculation uses ancillary powder (e.g., magnetite or sand) to help generate flocs which settle more quickly
Chemical disinfection (oxidising biocides)				
Chlorination	Classed as an oxidising biocide that, when diluted in water, destroys cell walls of micro-organisms	Well established and used in municipal and industrial water disinfection applications	Virtually ineffective against cysts unless concentration of at least 2 mg/l used. May lead to by-products (e.g., chlorinated hydrocarbons/ trihalomethanes	Efficiency of these processes varies according to conditions of the water such as pH, temperature and type of organism
Electro-chlorination	Creates oxidising solution by employing direct current into water which creates electrolytic reaction	As chlorination	As chlorination. Brine, needed to produce the chlorine, can be stored on board the vessel as feedstock for the system	Upstream pre-treatment of the water is desirable to reduce the 'demand' on the chlorination process
Ozonation	Ozone gas (1–2 mg/l) is bubbled into the water which decomposes and reacts with other chemicals to kill micro-organisms	Especially effective at killing micro-organisms	Not as effective at killing larger organisms. Produces bromate as a by-product. Ozonate generators are required in order to treat large volumes of ballast water. These may be expensive and require sufficient installation space	Systems in which chemicals are added normally need to be neutralised before discharge to avoid environmental damage in the ballast water area of discharge. Most ozone and chlorine systems are neutralised but some are not.
Chlorine dioxide	As chlorination	Effective on all micro-organisms as well as bacteria and other pathogens. It is also effective in high turbidity waters as it does not combine with organics.	Reagents used can be chemically hazardous	Chlorine dioxide has a half life in the region of 6–12 hours, according to suppliers, but at the concentrations at which it is typically employed it can be safely discharged after a maximum of 24 hours.
Peracetic acid and hydrogen peroxide	As chlorination	Infinitely soluble in water. Produces few harmful by-products and relatively stable.	Reagent is typically dosed at high levels, requires suitable storage facilities and can be relatively expensive	
Chemical disinfection (non-oxidising biocides)				
Menadione /Vitamin K	Menadione is toxic to invertebrates	Natural product often used in catfish farming but produced synthetically for commercial use. Safe to handle.	Treated water will typically require neutralising before discharge	
Physical disinfection				
Ultraviolet (UV) irradiation	Amalgam lamps surrounded by quartz sleeves produce UV light which denatures the micro-organism's DNA and prevents it from reproducing	Well established, used extensively in municipal and industrial water treatment applications. Effective against wide range of micro-organisms	Relies on good UV transmission through the water. Hence, needs clear water and unfouled quartz sleeves to be effective	Can be enhanced by combining with other reagents such as ozone, hydrogen peroxide or titanium dioxide
Deoxygenation	Reduces pressure of oxygen in space above the water with inert gas injection or by means of a vacuum to asphyxiate the micro-organisms	Removal of oxygen may result in a decrease in corrosion propensity. If an inert gas generator is already installed on the ship, deoxygenation plant would take up little additional space.	Typically, the time required for organisms to be asphyxiated is between one and four days	Process has been developed specifically for ballast water treatment whereby the de-aerated water is stored in sealed ballast tanks
Cavitation	Induced by ultra-sonic energy or gas injection. Disrupts the cell wall of organisms.	Useful as pre-treatment to aid overall treatment process	Must be used in conjunction with additional treatment process downstream in order to kill all micro-organisms	
Pressure/ vacuum	The majority of organisms are eliminated with a low temperature boiling condition. However, the process does not eliminate all of the bacteria.	Easy installation with a small footprint as the process does not require filters, chemicals and neutralisers.	Must be used in conjunction with additional treatment process to kill bacteria. Sediment build up must be managed as the process does not use filter.	

Table 4 – Ballast water treatment processes

Note: Descriptions provided in this table are general and may vary depending on the actual system. It is always recommended that full details of individual systems are investigated and this table alone should not be used as a basis for decision making.

5. Selecting, installing and operating a ballast water treatment system

5.1 Available ballast water treatment systems

There are a number of approved ballast water treatment systems available and there are many more systems which are expected to be submitted for test and approval in the near future. It is highly likely that in the short term there will be significant lead times for some of the more popular systems, particularly in the year leading up to entry into force of the BWM Convention and the years following entry into force when a peak in demand is expected to occur. However the early installation of ballast water treatment systems to meet the USCG requirements will mitigate this peak demand.

5.2 Selecting a treatment system

When selecting a treatment system, you need to consider:
- ship type
- max and min ballasting and de-ballasting rates
- ballast capacity
- space required (foot print and volume)
- flexibility of location of system components
- the effects of pressure drop
- integration with existing systems
- whether it is certified intrinsically safe
- power availability
- health and safety
- effects on tank structure/coatings
- availability of consumables, spares and support (servicing)
- additional crew workload
- crew training
- capital and operating cost
- system availability and delivery time.

Considerations for newbuilds
Shipbuilders should identify the options for installing ballast water treatment systems in their newbuild specifications – both within the construction programme or through retrofitting. This could involve providing system drawings to show how a selection of different treatment options might be fitted, ensuring that sufficient space has been allocated for retrofitting treatment systems if they are not included in the initial build.

Piping connections should also be fitted to ballast systems in preparation for retrofitting of the selected treatment equipment.

Considerations for existing ships
Operators will need to be aware of all modifications necessary to fit treatment systems to existing ships. It will be necessary to obtain schematic arrangements and equipment drawings from the system supplier in order for the technical department to develop a work plan. The work plan may alternatively be provided by the supplier, but the ship operator will still need to provide the ship's ballast water system drawings, functional requirements and details of compartmental spaces where the equipment is to be fitted.

Note: Although equipment manufacturers will have to obtain flag state certification for the type approval of systems, they may not be fully conversant with all the maritime regulations and codes of practice that need to be considered during their installation and operation (such as those relating to chemical hazards and confined space safety considerations). Owners' representatives should therefore carry out a review to ensure that regulations and codes of practice are not compromised.

Procurement specification considerations
In order to select a suitable system, ship operators will need to prepare a Procurement Specification for potential suppliers which details their technical requirements. This should include the following information:
- the ballast water pump flow rate that the treatment system will be required to cope with
  (Note: the treatment equipment capacity should be greater than the ship's ballast rate to allow for an operating margin.)
- a copy of the ballast system pipework diagrams showing the connections, pumping capacities and valves
- compartment details for the installation of treatment equipment and storage of consumable materials
- power supply availability and routing for control cabling

- certification requirements
- details of the ballast tank coatings.

Ship operators should expect suppliers to include the following information in their offer:
- confirmation that their system has sufficient capacity to meet the ship's maximum ballast flow rates
- the system's power consumption (excluding the ship's fitted ballast pumps) and any other electrical requirements
- the types of technology employed in the system
- the chemicals required and their consumption rates
- health and safety considerations in terms of working environment, handling and storage of chemicals
- protection systems for normal and emergency operation
- training requirements for system operation, calibration, monitoring and health and safety
- the work plan for supply to ship, installation, commissioning and test
- a statement of the effect that the treated ballast water will have on ballast tank coatings, including copies of relevant studies that support such claims
- an estimate of the reduction in the vessel's ballasting/deballasting rate following installation of the treatment system and a description of any mitigation measures (this should include details of pressure drops and the effect that the introduction of the treatment equipment will have on ballast pump suction and delivery performance).

When short-listing potential suppliers, in addition to price, operators should consider:
- installation and commissioning costs
- training requirements
- estimated operating costs including consumables
- maintenance requirements; operating experience
- delivery lead times for supply and fitting, and
- any special docking requirements or ship modifications required for equipment installation.

Additional considerations
After technical data has been received from the suppliers, operators should carry out the following engineering checks:
- Ensure that existing auxiliary generators and control systems can cope with the additional power requirements. (For some systems it may be necessary to upgrade generators.)
- Check that treatment equipment can be easily integrated into existing ballast systems.
- Check the suitability of control requirements, including alarms and protective devices.
- Conduct a review of local versus remote operating systems and ease of integration with existing machinery controls.
- Assess ease of maintenance, calibration and ballast water sampling.
- Assess the need for venting or other measures for compartments where active substances (chemical or otherwise) are stored or at risk of escape.
- Review manufacturers' maintenance requirements to confirm which activities the ship's staff are required to perform, what spares and consumables would need to be carried, and what service requirements, if any, would have to be undertaken by the original equipment manufacturer.
- Assess how sediments will be managed.
- Ensure ballast tank gauging will not be affected by the ballast water treatment system. (Pneumatic tank gauges may be affected by inerting of ballast tanks.)
- Ensure that the ballast water treatment system arrangements maintain the separation of ballast tanks located within 'gas safe' and 'gas dangerous' zones. In some cases, separate ballast water systems may be required for each zone. Typically, this applies to oil and chemical tankers.

Hazards and safety considerations and hazardous chemical storage and handling
A number of different chemicals or chemical processes are employed in the ballast water treatment systems available, including: chlorination; electrochlorination; ozonation; chlorine dioxide; peracetic acid; hydrogen peroxide; menadine/ vitamin K and perchloric acid.

Some systems generate chemicals during the treatment process; for others, chemicals are required to be stored on board. If chemicals are stored on board, the crew will require training on their use and handling. Suitable storage space for chemicals and proper ventilation are of paramount importance. The Material Safety Data Sheets for chemicals to be stored on board need to be consulted and where necessary the appropriate fire protection and extinction arrangements will need to be installed. Additional Information on the safety precautions for chemicals is provided in Section 6.

In the case of systems that generate chemicals during the treatment process, the crew will require training on the hazards associated with them.

Advice on the storage and handling of chemicals is contained in the IMO Circular, BWM.2/Circ.20 – Guidance to Ensure Safe Handling and Storage of Chemicals and Preparations Used to Treat Ballast Water and the Development of Safety Procedures for Risks to the Ship and Crew Resulting from the Treatment Process.

Inerted ballast tanks and gas hazards
Additional safety procedures need to be available to ships' staff to warn them about the dangers of entering ballast tanks that may have been inerted or have gas residues.

5.3 Installing ballast water treatment systems – general considerations

Consideration must be given to any risks that the installation and operation of the system may introduce on board the ship and how these risks can be mitigated. Risks include the storage of chemicals required for the operation of the system and by-products generated by the system.

In general, the installation of the system must comply with Lloyd's Registers Rules and Regulations for the Classification of Ships (the LR Rules and Regulations) and the relevant statutory regulations such as the BWM Convention and SOLAS.

The system should have a type approval certificate issued by, or on behalf of, a national administration in accordance with regulation D-3 of the BWM Convention and, if operating in US or Canadian waters, an AMS acceptance.

To ensure that the ship's sea water ballast system remains operational in the event of a ballast water treatment system failure or emergency, a suitable by-pass which can be remotely and manually controlled is to be installed.

Operation of the by-pass valve is to activate an audible and visual alarm in all stations from which the ballast water operations are controlled. Alarms are to be recorded by the control equipment.

Safety procedures are to be developed for managing and minimising risks in the design and operation of the treatment unit.

Controls, warnings and alarms
Ballast water management systems should incorporate a visual alarm which is always activated whenever the ballast water treatment system is being cleaned, calibrated or repaired and these events should be recorded by the control equipment. It is recommended that automatic ballast water treatment controls and alarms are integrated with, or located close to, the ship's ballast water controls.

Installation of ballast water treatment systems in hazardous areas
The installation of ballast water treatment systems in hazardous areas will be considered on a case-by-case basis against the requirements of Part 6, Chapter 2, Section 13 of the LR Rules and Regulations (Electrical equipment for use in explosive gas atmospheres or in the presence of combustible dusts). Installation is not to permit ballast water discharge from hazardous areas to non-hazardous areas. By-products of treated ballast water in ballast water tanks located in non-hazardous areas are not to render the area hazardous. Subject to full review and acceptance by LR, transfer of ballast water from machinery spaces to a hazardous area can be accepted but not vice versa.

For existing ships (those already in service) and ships under construction, installation of ballast water treatment systems within the cargo pump room is to be avoided if practical. For ships under construction, an alternative location for the treatment system is to be considered at the design stage.

Technologies
The key technical features of the systems with respect to available ballast water treatment technologies are summarised in Section 9. The table lists the general processes each system employs, but does not compare their specific details. It is worth noting that all of the products for which information is available, other than those based on gas injection, are either modular or can be made modular. Also, where systems are quoted as operating in fresh water, care should be taken to ascertain whether additional services are required (as highlighted in the table) such as addition of salt into the system through a brine. The figures provided in Section 9 are the maximum quoted by the manufacturers.

Flow capacity
Most systems are largely modular in design (other than the gas injection type) so there is no technical limit to the upper flow rate other than that imposed by size and/or cost. The list of available systems shown in Section 9 also refers to the pressure drop for each system.

Effect on ballast tank coatings
The active substances used by ballast water treatment systems may affect tank coatings. The effect on ballast tank coatings is still being researched. However, system manufacturers and coatings manufacturers state that treatment systems that are purely mechanical and do not employ active substances generally do not show a detrimental effect on approved epoxy ballast tank coatings. Research is continuing on the effect of active substances since in some cases the degrading effect on epoxy coatings is not conclusive.

In a number of cases, system manufacturers can provide reports on the effect of their systems on coatings.
The Group of Experts on the Scientific Aspects of Marine Environmental Protection "Ballast Water Working Group on Active Substances" (GESAMP–BWWG or WG 34) was established in November 2005 to review any proposals submitted to IMO in preparation for approval of ballast water treatment systems that use active substances. NACE International and IPPIC developed a standard for determining the effect of active substances on ballast tank coatings. This was recently accepted by GESAMP – BWWG and it is expected that GESAMP will apply this standard in future.

Footprint and installation
The footprint of systems, as reported by manufacturers, varies between 2.2 and 15m^2 for 500 m^3/h unit, and while the units may be predominantly modular, this does not imply that the footprint increases proportionately with flow capacity.
For most systems it is recommended that installation takes place in the engine/machine room near the existing ballast water pumps, although installation on deck may also be possible if appropriate precautions are taken. If the location is in an explosion zone, then the installation will need explosion proofing.

Costs
The biggest operating cost for most systems is power, and for large power consumers (electrolytic, UV and advanced oxidation processes) availability of shipboard power will be a factor. For chemical dosing systems, required power is very low and chemical costs are the major factor.

Cost data is not provided within this guide. However, when selecting a system, care should be taken in interpreting the cost information since there may be variation in the way underlying costs are calculated between suppliers. In general (except for the few technologies that use stored chemicals and the gas injection units that use fossil fuel) opex should be based on the power required to operate the process (e.g., UV irradiation, electrolysis or ozonation).

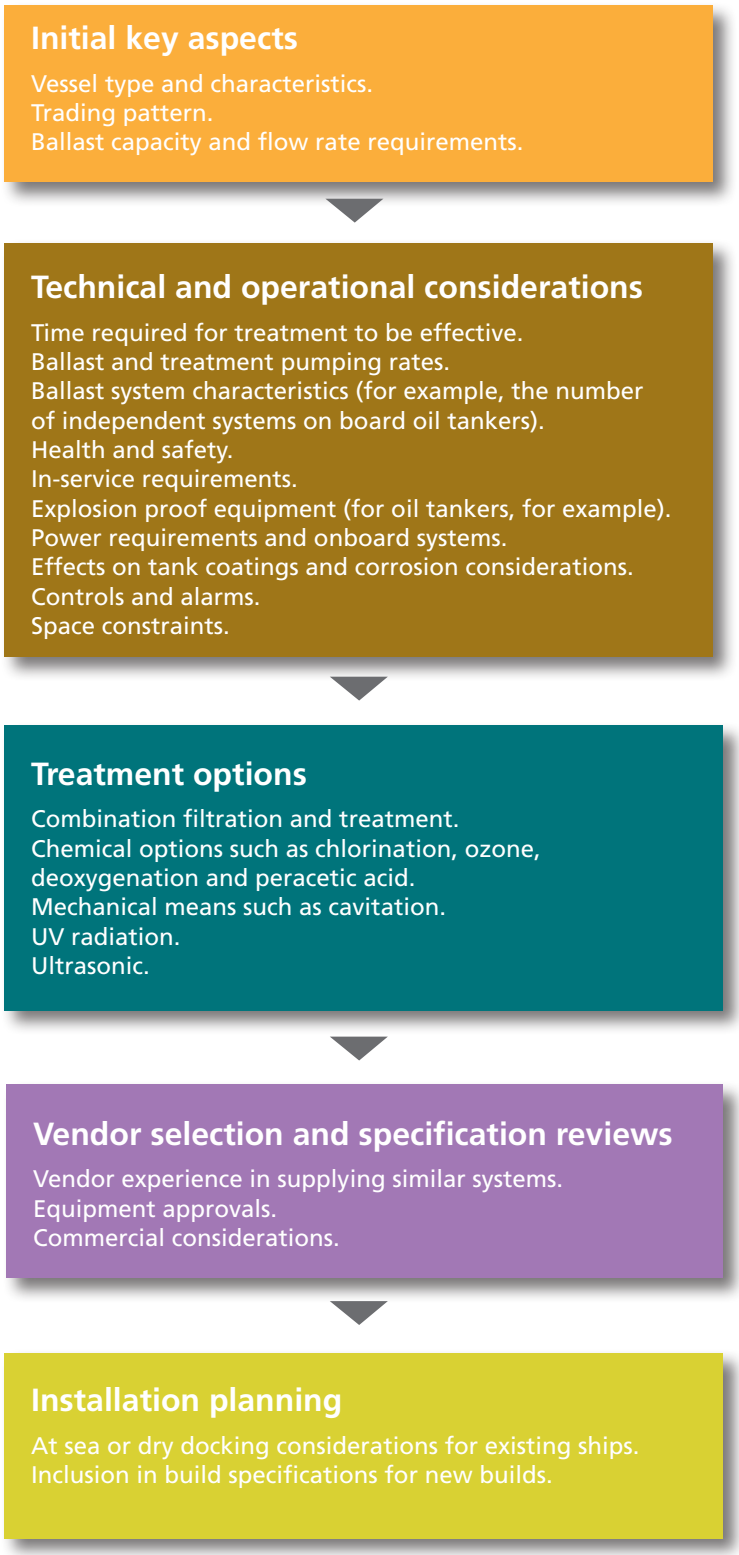

Figure 6 – Steps to selecting a treatment system

6. Active substances – hazards and safety precautions

Some treatment systems use or generate one or more active substances which are used in the treatment process. In addition, some systems require a neutraliser to be used to ensure that on discharge of ballast any residues of the active substance used in the treatment process are made safe.

The Materials Safety Data Sheet and manufacturer's recommendations should also be obtained for:
- handling and storage of chemicals
- crew safety and emergency procedures in the event of a spill, fire or explosion, and
- appropriate first aid measures in the event of chemicals coming into contact with the skin or being inhaled.

In addition, crews should be instructed in safe handling of chemicals. In some circumstances, further safety precautions may be necessary, including placing special personal protective equipment close to working areas, such as:
- full-face gas respirators or full body protection for dealing with leakages;
- eye wash stations;
- drenching showers; and
- appropriate fire fighting equipment relevant to the hazard.

Some chemical spills may require special cleaning procedures and separate storage facilities should be made available for the removal and temporary storage of clean-up residues.

In other systems an active substance is generated as part of the ballast water treatment process. Advice should be obtained from the system manufacturer on the active substance produced and the associated requirements for crew safety and emergency procedures in the event of a spill, fire or explosion.

7. Frequently asked questions

Q What does "ships constructed in or after" mean?
A This means ships with a keel laying date on or after 1 January in that year.

Q What does "date of delivery" mean?
A This means the date of delivery of a ship as stated on the ship's IOPP Certificate.

Q What do "ballast water" and "ballast water capacity" mean?
A The BWM Convention defines ballast water as "water with its suspended matter ta ken on board a ship to control trim, list, draught, stability or stresses of the ship."

Ballast water capacity is the total (100% full) capacity of all ballast water tanks, as shown in the ship's loading manual.

Q Hopper dredgers: is the water in the hoppers considered to be ballast and does it therefore need to be treated in accordance with the BWM Convention?
A At MEPC 62, the IMO agreed that water in the hopper area of hopper dredgers is not considered as ballast and issued BWM.2/Circ.32 – Applicability of the Ballast Water Management Convention – which clarifies the matter.

Q Can I be issued with a ballast water management certificate for my ship before the BWM Convention enters into force?
A Lloyd's Register can issue on request a certificate of compliance or statement of compliance with the BWM Convention at any time before entry into force.

At MEPC 63, the IMO agreed that once the date of entry into force of the BWM Convention is known, administrations and recognised organisations may issue International Ballast Water Management Certificates endorsed to state they are valid from the entry into force date.

Q All my ballast is discharged to a shore reception facility. Am I compliant with the BWM Convention?
A Yes. Ballast discharge ashore does comply with the BWM Convention but the ship will still require an International Ballast Water Management Certificate or Certificate /Statement of Compliance with the BWM Convention, a Ballast Water Management Plan and a Ballast Water Record Book.

Q Can I use fresh water as ballast and if I do will my ship be in compliance with the BWM Convention?
A Yes, but only if it is treated. The IMO decided at MEPC 59 that fresh water (even if generated on board) is ballast, as defined by the BWM Convention. Therefore, fresh water used as ballast is to be treated by an approved treatment system and must meet the D-2 standard.

Q What capacity ballast water treatment system do I need to install?
A The BWM Convention does not specify what capacity treatment system is required to be installed. Ideally the system should be capable of treating ballast at the maximum ballast pumping rate of the ship.

Note that if you choose to install a system that has a rated treatment capacity below the maximum ballast water treatment capacity of the ship then an operational restriction will be incurred. This will restrict the maximum ballast pumping rate to that of the maximum treatment capacity of the system installed. This will need to be clearly documented in the ship's approved Ballast Water Management Plan.

Q Where will I be permitted to exchange ballast?
A Whenever possible, conduct ballast water exchange at least 200 nautical miles from the nearest land and in water at least 200 metres deep, taking into account the IMO Guidelines:

"In cases where the ship is unable to conduct ballast water exchange as above, this should be as far from the nearest land as possible, and in all cases at least 50 nautical miles from the nearest land and in water at least 200 metres in depth.

When these requirements cannot be met areas may be designated where ships can conduct ballast water exchange. All ships shall remove and dispose of sediments from spaces designated to carry ballast water in accordance with the provisions of the ships' Ballast Water Management Plan (Regulation B-4). "

Q Which ships will require an approved Ballast Water Management Plan?
A All ships will be required have on board an approved Ballast Water Management Plan.

Q Is there a template to help me prepare my Ballast Water Management Plan?
A Yes. Lloyd's Register has produced a Model Ballast Water Management Plan that can be used as a template to develop a Plan for any ship. Download it at www.lr.org/bwm

Q How can I get my Ballast Water Management Plan approved?
A LR can approve your Plan. Contact your local office for assistance.

Q The BWM Convention entry into force date is known but I will not get my Ballast Water Management Plan approved in time – what can I do?
A At MEPC 63 the IMO agreed that provided the Ballast Water Management Plan has been submitted for approval and the administration or a recognised organisation has issued a statement confirming receipt, the ship can trade for no more than three (3) months with an un-approved Plan onboard.

Q I have a Ballast Water Management Plan approved to Res. A868(20), but not to IMO Resolution MEPC 127(53). What do I need to do?
A The IMO at MEPC 63 agreed that a Ballast Water Management Plan approved in accordance with A.868(20) will remain valid until the Plan is required to be updated. When a Plan does require updating, for example when a treatment system is installed, then it will need to be amended in accordance with Resolution MEPC 127(53) and be re-approved.

Q Will port state control (PSC) authorities sample and test ballast?
A Yes. PSC will have the right to sample and analyse the ballast being discharged to ensure that it has been exchanged (a salinity test) or treated to meet the regulation D-2 standard.

Q What are the US federal ballast water management requirements?
A The US regulations on ballast water management entered into force on 21 June, 2012. Ships calling at US ports and intending to discharge ballast will be required to use an approved ballast water treatment system that meets the US discharge standard (which is the same as the IMO D-2 standard), in line with a specific compliance timetable.

More information is available from the USCG at http://homeport.uscg.mil/ballastwater

8. Useful references

Other Lloyd's Register ballast water management publications
National Ballast Water Management Requirements
Model Ballast Water Management Plan

Both available to download at **www.lr.org/bwm**

IMO Resolutions and Circulars
MEPC.173(58) – Guidelines for ballast water sampling

MEPC.123(53) – Guidelines for ballast water management equivalent compliance

MEPC.127(53) – Guidelines for ballast water management and development of ballast water management plans

MEPC.124(53) – Guidelines for ballast water exchange

MEPC.162(56) – Guidelines for risk assessment under regulation A-4

MEPC.149(55) – Guidelines for ballast water exchange design and construction standards

MEPC.150(55) – Guidelines on design and construction to facilitate sediment control on ships

MEPC.163(56) – Guidelines for ballast water exchange in the Antarctic Treaty area

MEPC.206(62) – Procedure for approval of 'other methods' of Ballast Water Management under regulation B-3.7

BWM.2/Circ.7 – Interim Survey Guidelines for the purpose of the International Convention for the Control and Management of Ships' Ballast Water and Sediments under the Harmonized System of Survey and Certification (resolution A.948(23))

BWM.2/Circ.20 – Guidance to ensure safe handling and storage of chemicals and preparations used to treat ballast water and the development of safety procedures for risks to the ship and crew resulting from the treatment process.

BWM.2/Circ.29 rev 1 – Clarification Regarding the Application Dates Contained in Regulation B-3.1 of the BWM Convention

BWM.2/Circ.32 – Applicability of the Ballast Water Convention to Hopper Dredgers

Further information is available on the IMO's website at www.imo.org

Globallast Partnerships
Information on the IMO, Global Environment Facility (GEF),and United Nations Development Programme (UNDP) Global Ballast Water Management Programme – http://globallast.imo.org/

United States regulations
United States Coast Guard environmental standards – http://homeport.uscg.mil/ballastwater
California State ballast water legislation – http://www.slc.ca.gov/Spec_Pub/MFD/Ballast_Water/Laws_Regulations.html
VGP: http://cfpub.epa.gov/npdes/vessels/vgpermit.cfm

9. Listing by supplier

Note: to print this page, choose 'File, Print, Current Page, Poster'.

Manufacturer	Website	Test site	System testing		Does the system use active substance?	Active substance approval		G8 Type Approval certificate	USCG AMS		USCG Type Approval	Units				Capacity (x1,000m3/h)		Footprint (m^2)		Max height		Power requirement (kWh)		Other services required	Pressure drop or inlet pressure (Bar)	Suitable for freshwater, brackish, marine?	What are the active substances used?	What quantity of active substance is needed?	Does the system need neutralisation?	What is the dosing rate of the chemical (ml/m^3)?	Treatment time	What is the method of treatment?	Does your system affect tank coatings?	When does the treatment take place (uptake, on voyage, discharge)?	Treatment method												
																																				Mechanical separation				Disinfection									
			Land-based	Shipboard		Basic	Final		Submission date	Approval date		Sold	Installed	Retrofits	Operating	Minimum	Maximum	$500m^3/h$	$5,000m^3/h$	$500m^3/h$	$5,000m^3/h$	$500m^3$ system	$5,000m^3$ system												HC	Filt	Coag	None	O_3	Cl	EL/EC	Chemical / biological	Res	UV	Deox	P/V	Cav	US	AO
Alfa Laval Tumba AB Pureballast (1.0)	www.alfalaval.com	DHI			Yes	Jun-05	Jul-07	Jun-08		Apr-13						0.25	3	4.2 (for 1,000m^3)	–	2.1	2.65	34-64	260-500	None	0.8	All salinities			No	N/A	Immediate	Filt and UV enhanced by AO		Uptake and discharge (filtration on uptake only)		X								X					TiO_2
Alfa Laval Tumba AB Pureballast (2.0)	www.alfalaval.com	DHI	Jul-10	Apr-08	No	N/A	N/A	Mar-11		Apr-13		~500	~120	~25	~100	0.25	3	4.2 (for 1,000m^3)	–	2.1	2.65	34-64	260-500	None	0.8	All salinities			No	N/A	Immediate	Filt and UV enhanced by AO	No active substance	Uptake and discharge (filtration on uptake only)		X								X					TiO_2
Alfa Laval Tumba AB Pureballast (3.0)	www.alfalaval.com	DHI														0.25	3	4.2 (for 1,000m^3)	–	2.1	2.65	34-64	260-500	None	0.8	All salinities			No	N/A	Immediate	Filt and UV enhanced by AO		Uptake and discharge (filtration on uptake only)		X								X					TiO_2
Aqua Eng. Co., Ltd. AquaStarTM	www.aquaeng.kr	KOMERI	Oct-10	Oct-11	Yes	Jul-10	Mar-12	Jun-12	May-13	In progress		4	3	2	2	0.2	5	3.3	12.4	1.1	2.1	16-22	165-220	Air	<0.5	>10PSU	NaClO	9g/m3	Yes	2.2		Electrolytic disinfectant		Uptake			X		X					X		X		
atg UV Technology	www.atguv.com	NIVA	Apr-10	Jul-11	No	N/A	N/A						1			>10		25 (for 200m^3)				125 (for 1,000m^3)		None		>10PSU	None	N/A					No active substance			X								X					
Auramarine Ltd. Crystal Ballast®	www.auramarine.com	NIVA & DHI	Apr-10	May-12	No	N/A	N/A	Sep-12				12	6	5	2	0.021	0.25	12.4	–	<2.1	–	83	_	Air	<0.7	All salinities	None	N/A	No	N/A	Immediate	Filt and medium pressure UV	No active substance	Uptake and discharge		X								X					
BioSea BWT Solutions BIO-UV	www.ballast-water-treatment.com	DHI	Nov-11	Feb-13	No	N/A	N/A	Jun-13	Sep-13	In progress		5	2	2	2	0.075	2	4.07-5.75	–	2.4	–	128 (poor quality water)	_	Air and water	<0.7	2.6-35PSU	None	N/A	No	N/A	1 hr	Filt and medium pressure UV	No active substance	Uptake and discharge (filtration on uptake only)		X								X					
Cathelco Ltd.	www.cathelco.com	NIOZ	Oct-12	May-13	No	N/A	N/A					0	1	1	1	0.05	2.4	9	25.5 (for 1,200m3)	2.75	3.4 (for 1,200m3)	85.5-107.5	171-234 (for 1,200m^3)	Air		All salinities	None	N/A	No	N/A	Immediate	Filt and UV	No active substance	Uptake and discharge		X								X					
China Ocean Shipping Company (COSCO)	www.cosco.com	Weihai	Jul-09	Nov-09	Yes	Jul-09	In progress	Feb-11										2 (for 200m^3)	7 (for 2,000m3)			76 (for 1,000m3)				All salinities										X								X					
Coldharbour Marine	www.coldharbourmarine.com	MEA			No	N/A	N/A						1	1	1	In tank treatment						N/A	N/A	Marine Diesel Oil	0	Not yet certified for freshwater use	None	N/A	No	N/A	5 day	Deox, hypercapnia and US	Anticipated beneficial effect	During voyage			X								X		X	X	
Dalian Maritime University DMU OH		Dalian			Yes	Mar-12	In progress								4	0.01								Air	0.025	All salinities	OH•, O_3 & H_2O_2	1.5-2.5g/m^3	Yes	250	Immediate	OH•-based AO process		Uptake		X															OH•
DESMI Ocean Guard A/S OxyClean	www.desmioceanguard.com	DHI	Aug-11	Apr-12	Yes	Mar-10	Oct-12	Nov-12	May-13	Oct-13		1	1	0	1	0.075	3	4.2	45.6	2.48	3.59	45.6-62.4	456-582	Air	< 0.5	All salinities	O_3	In-situ generated active substance	No	N/A	Immediate	Filt, low pressure UV & O_3 injection		Uptake and discharge		X		X					X					
DESMI Ocean Guard A/S RayClean	www.desmioceanguard.com	DHI	Sep-13		No	N/A	N/A					0	0	0	1	0.1	3	6	35	2.3	3.11	30-48	240-384	None	< 0.5	All salinities	None	N/A	No	N/A	Immediate	Filt and low pressure UV	No active substance	Uptake and discharge		X								X					
Ecochlor Inc.	www.ecochlor.com	NIOZ	Jul-08	Feb-11	Yes	Oct-08	Oct-10	Nov-11	Apr-13	Jun-13		11	3	2	3	0.25	16.2	12.4	25.1	2.8	3.6	4.2-6.6	11.9-33	Air	0.5	Marine (freshwater and brackish are suitable if saltwater is available on board)	ClO_2 (chlorine-free process)	~15ml/m^3			Immediate	Filt and generation/ injection of ClO_2		Uptake			X		X (ClO_2)								
Envirotech and Consultancy Pte. Ltd. BlueSeas	www.blueseas.com.sg				Yes	Jul-11	In progress						1	1	1	0.1	Unlimited	15	50	1.5-2.5	1.5-2.5	20	200		<0.5	Marine (freshwater and brackish are suitable if saltwater is available on board)	TRO	12g/m3 TRO	Yes		1 day	Chlorination/free radicals		Uptake		X			X		X						
Envirotech and Consultancy Pte. Ltd. BlueWorld	www.blueseas.com.sg				Yes	Jul-11	In progress									0.1	Unlimited	12	45	1.5-2.5	1.5-2.5	20	200		<0.5	Marine (freshwater and brackish are suitable if saltwater is available on board)	TRO	12g/m3 TRO	Yes		1 day	Chlorination/free radicals		Uptake		X			X		X						
Erma First SA	www.ermafirst.com	NIOZ	Jun-10	Aug-11	Yes	Jul-11	Mar-12	May-12	May-13	In progress		25	5	3	3	0.05	3	4	–	3	–	15-20	–	Air	<1.2	>0.5PSU		In-situ generated active substance	Yes	10	~2hr	Chemical disinfection		Uptake	X	X			X									
GEA Westfalia BallastMaster EcoP	www.westfalia-separator.com				Yes	Jul-11	In progress						1			>10						15 (for 1000m^3)			0.5	Marine (freshwater and brackish are suitable if saltwater is available on board)		In-situ generated active substance								X			X		[4]						
GEA Westfalia BallastMaster UltraV	www.westfalia-separator.com	NIOZ	May-10	Jan-11	Yes	May-09	In progress	Dec-11	Jul-13			21	17	7	5	0.25	0.5	1.6 (for 250m3)	–	1.8	–	63	–	Freshwater	<0.8	All salinities (water quality >45% UV transmittance)		In-situ generated active substance	No	N/A	Immediate to 1hr	Filt and low pressure UV		Uptake and discharge		X								X					
Hanla IMS Co. Ltd. EcoGuardianTM	www.hanlaims.com	Tongyoung	Jul-12	In progress	Yes	Mar-12	Apr-13					3	1	1	1	0.125	6	6		2.3		24 (@30PSU)	240 (@30PSU)	Air and water	<0.6	Marine (freshwater and brackish are suitable if saltwater is available on board)	NaClO	In-situ generated active substance	Yes	8000	>2 days	Filt and EL		Uptake		X			X		X						
Headway Technology Co. Ltd. OceanGuard	www.headwaytech.com	NIVA	Jul-09	Dec-09	Yes	Mar-10	Oct-10	Mar-11	Jul-12	Apr-13		249	49	4	39	0.05	9	3.5	8.4	2.33	3.33	8.5	85	None	0.6	All salinities	OH•	2g/m3	Optional (not always needed)	2	Immediate	Advanced electro-catalysis oxidation process		Uptake		X			X[3]						X		OH•
Hyde Marine Inc. Hyde GUARDIAN®	www.hydemarine.com	NIOZ	Apr-08	Apr-08	No	N/A	N/A	Apr-09	Jul-12	Apr-13		>250	>100	>20	>100	0.06	6	Modular				40-50	350-450	Air	0.3-1.0	All salinities	None	N/A	No	N/A	Immediate	Medium pressure UV	No active substance	Uptake and discharge		X								X					
Hyundai Heavy Industries EcoBallastTM	www.hhi.co.kr	KOMERI	2008	2009	Yes	Jul-09	Mar-10	Mar-11				33	16	0	9	0.15	2.88	3.5	9.7	2.1	2.1	77	770	None	0.5	All salinities			No	N/A	Immediate	Filt and UV		Uptake and discharge		X								X					
Hyundai Heavy Industries HiBallastTM	www.hhi.co.kr	KOMERI	2010	2011	Yes	Mar-10	Jul-11	Nov-11	Jan-13	Jun-13		125	20	2	13	0.075	8	4.6	11	2.3	2.8	<25	<250		0.5	Marine (freshwater and brackish are suitable if saltwater is available on board)	NaClO	< 9g/m^3 based on TRO	Yes	~1.8g/m^3 based on sodium thiosulfate	~3hrs	Filt and EL		Uptake		X			X		X						
JFE Engineering Corporation JFE BallastAce®	www.jfe-eng.co.jp	JAPAN	Mar-09	Sep-09	Yes	Oct-08	Mar-10	Mar-11	Jun-13	Oct-13		300	~30	8	13	0.2	4.5	~5	~21	~1.8	~2.7	6.2	13.4	None	0.5	All salinities	NaClO	25ml/m3	Yes, if TRO is >0.2g/m^3	25		Filt and chemical treatment		Uptake		X			X (NaClO)		X						
Knutsen Ballastvann AS – KBAL	www.knutsenoas.com	NIVA	Sep-10	Aug-11	No	N/A	N/A	Nov-12					4			3		1 (for 200m^3)	4 (for 2,000m^3)			80 (for 1,000m^3)		None	2		None	N/A	No	N/A			No active substance										X		X			
Kuraray Co. Ltd. MICROFADETM	www.kuraray.co.jp	MTIC	Apr-10	Mar-12	Yes	Oct-10	Mar-12	Jun-13	Jun-13	Oct-13		20	7	2	3	0.25	1.5	4.1	–	2.1	–	2.1	–	Air and freshwater	0.4	All salinities	Calcium hypochlorite	3g/m^3	Yes, but not always necessary	2g TRO/m3	No holding time	Filt and disinfection		Uptake		X			X (as Cl2)								
Mahle Industriefiltration GmbH Ocean Protection System (OPS)	www.mahle-industrialfiltration.com	NIOZ	2009	2010	No	N/A	N/A	Apr-11					22			2		4 (for 200m^3)	18 (for 2,000m^3)			60 (for 1,000m^3)		Air and water	< 0.9	All salinities	None	N/A					No active substance			X								X					
Marenco Technology Group Inc.	www.marencogroup.com	MLML	2007	2007	No	N/A	N/A						3					1.165 (for 200m^3)				60 (for 1,000m^3)		None			None	N/A					No active substance			X								X					
MH Systems Inc.	www.mhsystemscorp.com www.ballastwatersolution.com	CMA			No	N/A	N/A					0	0	0	0	Unlimited	Unlimited	2.25	9	1.5	2	35	350	None		All salinities	None	N/A	No	N/A	2-4hrs bubbling inert gas then 24hr resident time	Diffusion of inert gas by bubbling	Anticipated beneficial effect	During voyage			X							X[1]		X		
Mitsui Engineering & Shipbuilding FineBallast® MF	www.mes.co.jp	KORDI	Nov-11	Mar-13	No	N/A	N/A					0	1	0	1	0.001	0.25	15	–	2.8	–	No additional power required	–	Air	1	All salinities	None	N/A	No	N/A	Zero	Micro filt	No active substance	Uptake		X													
Mitsui Engineering & Shipbuilding FineBallast® OZ	www.mes.co.jp	JAMS	Feb-08	Mar-09	Yes	Oct-06	Oct-10	Jun-11				0	1	0	1	0.3								Air and water	3			In-situ generated active substance									X	X						X				
MMC Green Technology AS	www.mmcgt.no	NIVA	Feb-12	Nov-12	No	N/A	N/A	Dec-12	Apr-13	Sep-13		28	5			0.1	2.4	9.6	N/A	2.5	–	53	–	Air and fresh water	0.5 max	All salinities	None	N/A	No	N/A	Immediate	Particle filtering and UV	No active substance	Uptake and discharge		X								X					
NEI Treatment Systems LLC VOs	www.nei-marine.com	MERC	2004	2005	No	N/A	N/A	Oct-07	Jul-13	In progress		42	22	0	6	0.25	Unlimited	2.7	12.48	2.1	3.53	22	195	Cooling water	0	All salinities	None	N/A	No	N/A	~10secs and requires 48hrs to fully treat	Deox and Cav	Anticipated beneficial effect	Uptake			X							X		X		
Nippon Yuka KogyoCo. Ltd./ Katayama Chemical Inc. SKY-SYSTEM	www.nipponyuka.jp	JAMS	Mar-10	Sep-12	Yes	Jul-11	In progress					0	1	1	0	Unlimited	Unlimited	14.8	44.3	2.9	5.8	15.0	–	Freshwater	0	All salinities	PERACLEAN® Ocean[2]	130ml/m^3	Yes	200-1600	Immediate	Chemical sterilisation		Uptake													
NK Co. Ltd. BlueBallast System	www.nkcf.com	KOMERI	Sep-07	Nov-07	Yes	Jul-07	Jul-09	Nov-09		Apr-13		281	38	1+		> 10		8.6	27	2.3	31.3	>70	558	Water	0	All salinities	O_3	In-situ generated active substance	Yes, if TRO >0.2g/m^3, but normally TRO level is <0.02g/m^3 two days later	2.5	Immediate to 12hrs	O_3					X	X								
Oceansaver AS (MKI)	www.oceansaver.com	NIVA	Nov-07	Sep-08	Yes	Apr-08	Oct-08	Apr-09				21	21	12		5	9.2	11	23	1		59	382	Air, fresh water, heat or steam		1PSU	Hypochlorite, hypobromite, hypochlorous acid and hypobromous acid	In-situ generated active substance	Yes	1		Filtration and electrodialysis	Anticipated beneficial effect	Uptake		X					X			X		X		OH•
Oceansaver AS (MKII)	www.oceansaver.com	NIVA	Jun-11	Dec-11	Yes	Oct-08	Oct-12	Mar-13	May-13	Sep-13		71	9	8		5	9.2	11	23	1		59	382	Air, fresh water, heat or steam		1PSU		In-situ generated active substance	Yes	1		Filtration and electrodialysis	Anticipated beneficial effect	Uptake		X					X			X		X		OH•
Optimarin AS	www.optimarin.com	NIVA	May-08	Jan-09	No	N/A	N/A	Nov-09		Jun-13		265	100	13	100	0.08	5.4	3.0	12.45	1.8	3.7	58	360	Air	0.5	All salinities	None	N/A	No	N/A		Filtration and UV	No active substance	Uptake and discharge		X								X					
Panasia Co. Ltd. GloEn-PatrolTM	www.worldpanasia.com	Busan	Dec-08	Sep-09	Yes	Apr-08	Mar-10	Dec-09	Aug-12	Apr-13		411	211	2	160	0.05	6	2.72	17.8	1.7	2	60	375	Air	0.6	All salinities			No	N/A	Immediate	Filtration and UV		Uptake and discharge (filtration on uptake only)		X								X					
RWO GmbH CleanBallast®	www.rwo.com	NIVA	Nov-08	Jan-10	Yes	Oct-06	Jul-09	Sep-10	Aug-12	Apr-13		>100	76	1	48	0.15	3.75	8.47	55.91 (for 3,750m^3)	2.39	2.87 (for 3750m^3)	6 (high salinity) 43 (low salinity)	27 (high salinity) 257 (low salinity) (for 3750m^3)	Air	0.7	>0.5PSU	OH• and TRO (as byproduct)	TRO <2g/m^3, max 2.5g/m^3 during ballasting TRO <1g/m3, max 1.5g/m3 during deballasting[5]	Yes, if TRO is >0.2g/m^3	Neutralisation at 3.5ml/m^3 in water with high salinity		Filtration, AO and EL/EC		Uptake and discharge (filtration on uptake only)		X					X							OH•
Samsung Heavy Industries Neo-PurimarTM	www.shi.samsung.com	MBDC	Jan-12	Apr-12	Yes	Jul-11	Mar-12						0			6.5								Salt and air	0.5	All salinities		In-situ generated active substance								X					X		X					
Samsung Heavy Industries PurimarTM	www.shi.samsung.co.kr	Busan	Sep-11	Mar-11	Yes	Oct-10	Jul-11	Oct-11	Jun-13	In progress		99	10	1	10	0.25	6.5	5.8	13.1	2.43	2.43	14	76	Saltwater for freshwater operation	0.2	All salinities	Hypochlorous acid and hypobromous acid	3g/m^3	Yes		In-situ treatment. An additional disinfection in ballast tank occurs due to residual chlorine	Indirect electrolysis (EC, side stream injection)		EC on uptake and neutralisation on discharge		X			X		X						
Severn Trent De Nora BALPURE®	www.balpure.com	NIOZ	Jul-09	Dec-10	Yes	Mar-10	Oct-10	Jul-11	Aug-12	Apr-13		20	10	1	4	0.5	5	7.5	15	2.21	3.15	13-30	125-330	Air, water and saltwater for freshwater operation	0.5	All salinities	NaClO	In-situ generated active substance	Yes	Neutralisation dosing is automatic at approximately 5-7ml/m^3	24hrs	Filtration and EL/EC		Uptake		X			X		X						
Siemens SeaCURE™	www.siemens.com/seacure	CMA	2009 (low salinity), 2010 (high salinity)	May-13	Yes	Mar-10	Mar-12					1	1	1	1	0.5	4	14	25 (for 4,000m^3)	2.45	2.45 (for 4000m^3)	48	383 (for 2x2500m^3)	Air and water	< 0.5	All salinities	NaClO	Up to 6g/m^3	Yes, if voyage is <5 days	Made in solution when required at 5g/m^3 (no dechlorination required for long journey times)	24hrs	Filtration and EC		Uptake		X			X								
Sumitomo Electric Industries Ltd. ECOMARINE™	www.global-sei.com	JAPAN	Jan-12	In progress	No	N/A	N/A	In progress	N/A	N/A		0	1	1	1	0.1	0.5	7.5	–	2.3	–	52	–	Air and freshwater	0.5	All salinities	None	N/A	No	N/A		Filt and UV	No active substance	Uptake or voyage or discharge		X								X					
Sunrui Marine Environment Engineering Company BalClor[1][3]	www.sunrui.net	Qingdao	Dec-09	Dec-10	Yes	Mar-10	Oct-10	Jan-11	Apr-10	May-13		251	60	6	50	0.1	7.2	2.72	7.5	2.3	3.15	17	175		<0.5	All salinities	TRO (NaClO)	In-situ generated active substance								X					X						
Techcross Electro-Cleen™ System	www.techcross.net	KORDI	Aug-07	Aug-07	Yes	Mar-06	Oct-08	Dec-08	May-13	Oct-13		640	300	7	210	0.15	10	2.4	14.7	3	3	19	172	Freshwater for cooling	0.2	All salinities except salinity with below 1PSU	Hypochlorite	In-situ generated active substance	Yes	3.7	6hr+	EL and AO		Uptake			X		X								OH•
Wärtsilä Water Systems Ltd AQUARIUS™ UV	www.wartsila.com	NIOZ	2011-2012	2012	No	N/A	N/A	Dec-12		Oct-13		7	6	3	2	0.05	1	5.0	43.3	2.12	2.53	68	520	None	<0.8	All salinities	None	N/A	No	N/A		Filt and medium presure UV	No active substance	Uptake and discharge		X								X					
Wärtsilä Water Systems Ltd. AQUARIUS™ EC	www.wartsila.com	NIOZ	2011	2012	Yes	Oct-12	May-13	In progress				0	1	1	1	0.25	3.3	11.6	32.1 (for 6,000m^3/h)	2.1	3.1 (for 6000m^3)	48.8	568 (for 6000m^3)	Saltwater for freshwater operation	<0.8	All salinities	TRO (NaClO)	10g/m^3	Yes	Variable on TRO detected		Filt and EC		Uptake and neutralisation on discharge if required		X			X								
Wuxi Brightsky Electronic Co. Ltd. BSKY	www.bsky.cn	ZhouShan	May-10	Jan-11	No	N/A	N/A	Mar-11	Jan-13	Oct-13		114	24	9	5	0.1	6	2.2	7	2.7	2.97	~ 32	~ 310	None	0.6	All salinities	None	N/A	No	N/A		Physical treatment (mainly HC and UV)	No active substance	Uptake and discharge	X											X		X

Footnotes (numbers in orange)

1 For some systems capacity can be increased by running multiple systems

2 Evonik (www.evonic.de) manufactures and markets PERACLEAN® Ocean (peracetic acid + H_2O_2) for ballast water treatment worldwide

3 Electrocatalysis

4 Optional

5 Plus carbonation

10. Glossary of symbols, terms and abbreviations

AO	Advanced oxidation
Capex	Capital expenditure
Cav	Cavitation
Cl	Chlorination
Cl_2	Chlorine
ClO_2	Chlorine dioxide
Coag	Coagulant (with magnetic particles)
Deox	Deoxygenation
EL/EC	Electrolysis/electrochlorination
Filt	Filtration
H_2O_2	Hydrogen peroxide
HC	Hydrocyclone
N/A	Not applicable
N/R	Not required
NaClO	Sodium hypochlorite
O_3	Ozonation
OH•	Hydroxyl radical
Opex	Operating expenditure
P/V	Pressure / Vacuum
PSU	Practical Salinity Unit
Res	Residual (chemical reduction)
TRO	Total Residual Oxidant
US	Ultrasonic treatment
UV	Ultraviolet treatment

Organisations and test sites

CMA	California Maritime Academy
DHI	Danish Hydraulic Institute
GSI	Great Ships Initiative
IPPIC	International Paint and Printing Ink Council
JAMS	Japan Association of Marine Safety
KOMERI	Korea Marine Equipment Research Institute
KORDI	Korean Ocean Research and Development Institute
MBDC	Marine Bio-industry Development Centre
MEA	Marine Eco-Analytics
MERC	Maritime Environmental Resource Center
MLML	Moss Landing Marine Laboratories
MTIC	Marine Technology Institute Corporation, Japan
NACE International	The Corrosion Society
NIOZ	Royal Netherlands Institute for Sea Research
NIVA	Norwegian Institute for Water Research

Test standards

ASTM	American Society for Testing and Materials
BSH	Bundesamt für Seeschifffahrt und Hydrographie
ETV	Environmental Technology Verification
GESAMP	Group of Experts on the Scientific Aspects of Marine Environmental Protection
ISO	International Organization for Standardization
PSPC	Performance Standard for Protective Coatings (IMO)

11. Consultancy capability

When the BWM Convention enters into force it will impose a number of requirements on ship owners and operators. More recently, the USCG has also introduced regulations. For many ships the most practical way to comply with these new regulations will be to install a ballast water treatment system. However, other alternative compliance options may be suitable for certain ship types and trades. Our consultancy services can help you understand the regulations and support you in deciding how best to respond, with bespoke solutions to suit you.

Ballast water management training
We provide standard training courses for shore-based staff covering ballast water regulations, options for compliance, ballast water treatment technologies, and retrofitting issues.

How to comply with the BWM Convention and the USCG requirements
Deciding when and how to comply with upcoming ballast water legislation is critical to the well-being of most ship owners and operators. Making these decisions requires a detailed understanding of the regulations, the compliance options, and the associated technical and commercial risks. Lloyd's Register can help you develop a robust compliance plan for your fleet that identifies the best technology for each ship and a schedule for its implementation.

Ballast water management plans
Our guidance can help you prepare for entry into force of the BWM Convention and provide you with information on national ballast water management requirements. We can also check that your ship-specific ballast water management plans comply with the IMO requirements.

Ballast water treatment system services
Lloyd's Register offers a ballast water treatment selection service that can be tailored to meet your needs and address risk-related issues. We also provide online guidance that lists the systems that are available and explains some of the issues to consider when installing a ballast water treatment system.

Alternative methods of compliance
While most ships will comply with upcoming ballast water legislation by installing a ballast water treatment system, other alternative options can be used: for example, discharging ballast water to a reception facility. Lloyd's Register can help you understand the advantages and disadvantages of the various options and, if suitable, work with other stakeholders to develop a feasibility study and robust risk assessment.

For more information, contact marine-environment@lr.org

Lloyd's Register
Marine

Lloyd's Register EMEA
Mountbatten House, 1 Grosvenor Square
Southampton SO15 2JU
United Kingdom

E marine-environment@lr.org
www.lr.org/bwm

www.lr.org/bwm

March 2014
Lloyd's Register and variants of it are trading names of Lloyd's Register Group Limited, its subsidiaries and affiliates.
Copyright © Lloyd's Register Group Limited. 2014. A member of the Lloyd's Register group.